TEAR SHEET

Evans Swing Arm Sconce

Item # RL 2010AN-P

Designer: Ralph Lauren

Height: 12.75"
Width: 10"
Extension: 11-19.5"
Backplate: 4.25" Square
Finishes: AN, BZ, NB, PN
Shade Treatments: P
Shade Details: 8" x 10" x 7.5" Nordy
Socket: E26 Dimmer
Wattage: 60 A19
Weight: 5 Pounds
Note: Cord Cover Included

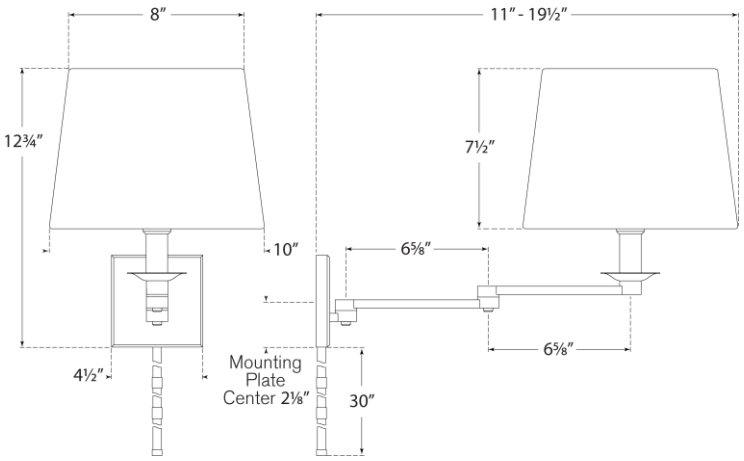

VISUAL COMFORT & CO.